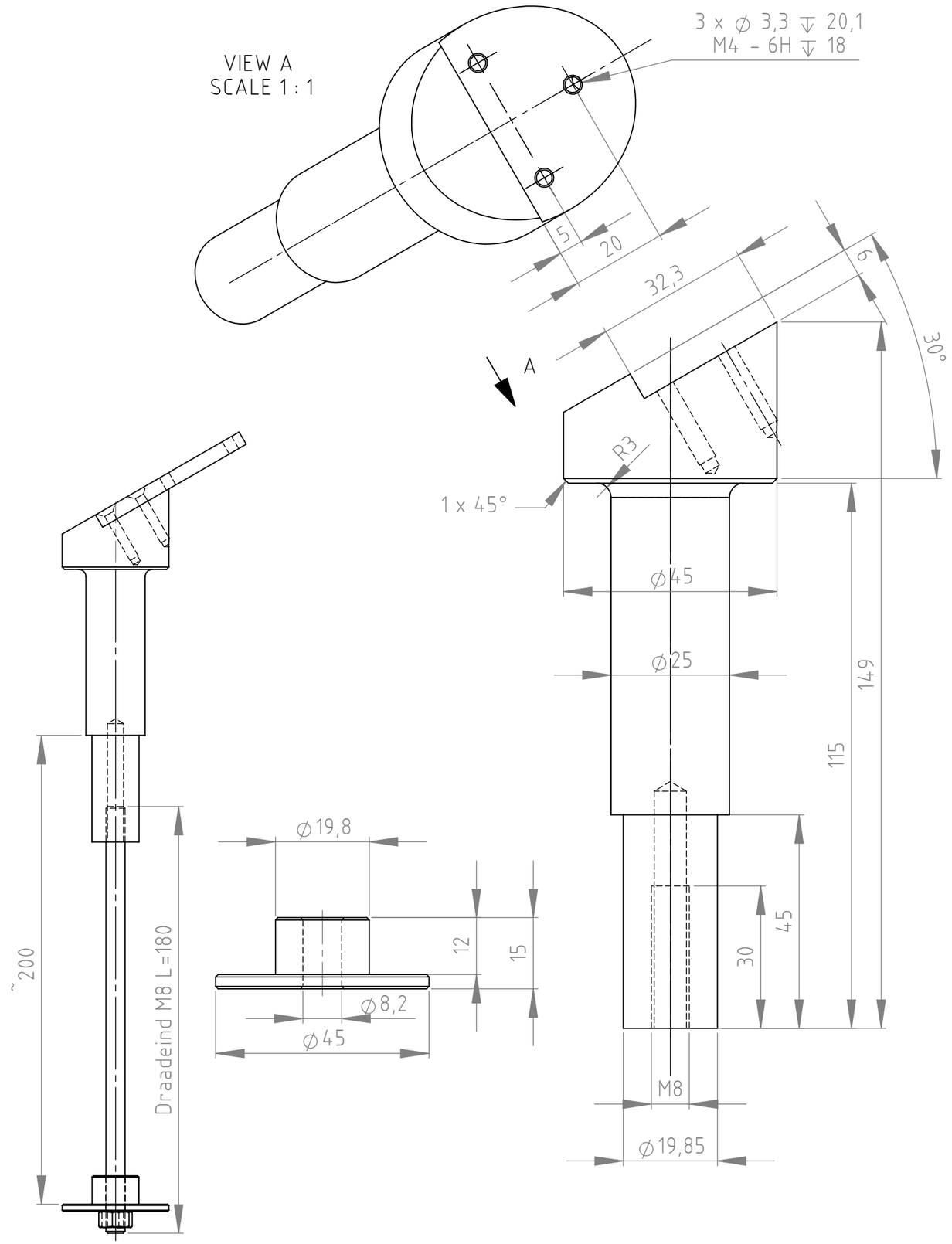

Revision table

Rev	Description	Date	Name

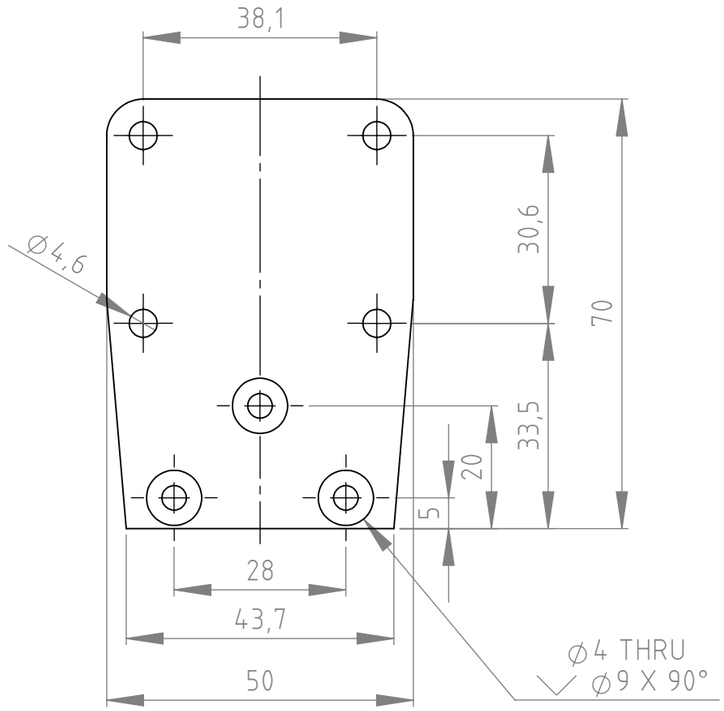

Dik 6 mm

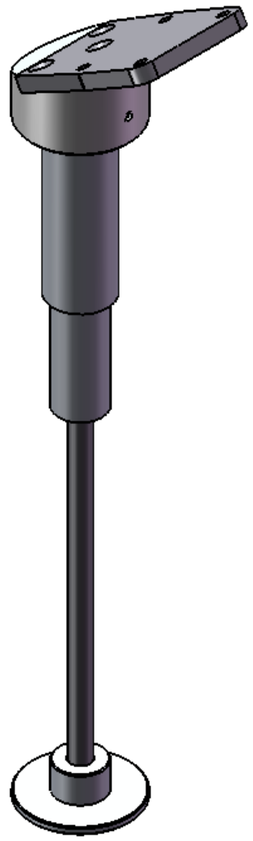

Title: Garmin houder voor BMW R100RS zonder stuurdemper		Deviation for dimensions w.o. tolerances	
		Lin. & Ang. Tol. Grade: m	ISO 2768-1
		Geometrical Tol. Grade: K	ISO 2768-2
		Welding Tol. Grade: B	ISO 13920
Drawn		Roughness Ra 3.2 µm	0.35 Kg
	18-7-2008	Finish	A3
Scale	1:2		
Checked		Drawing number	Garmin houder
		Sheetnumber 1 / 1	Rev

P.Gubbels
Trichterweg 146
6446AT Brunssum

This drawing is and remains our exclusive property and may not be reproduced published or disclosed without our written permission

Work-table	Sawed	Constructed	Rolled	Milled	Checked	Conservated	Assembled
Date / Name							